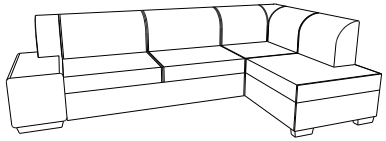

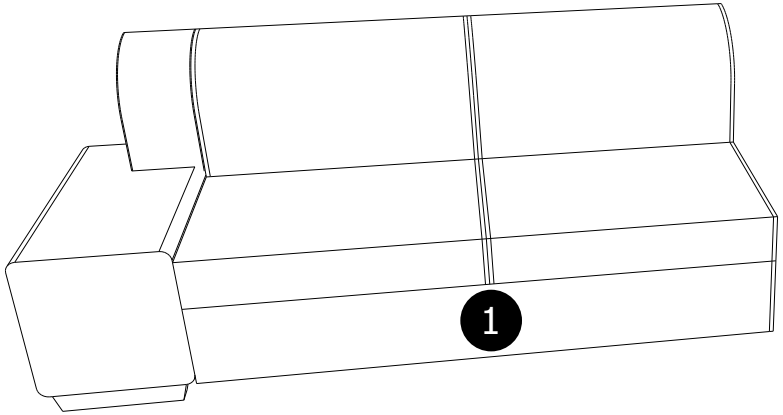
1

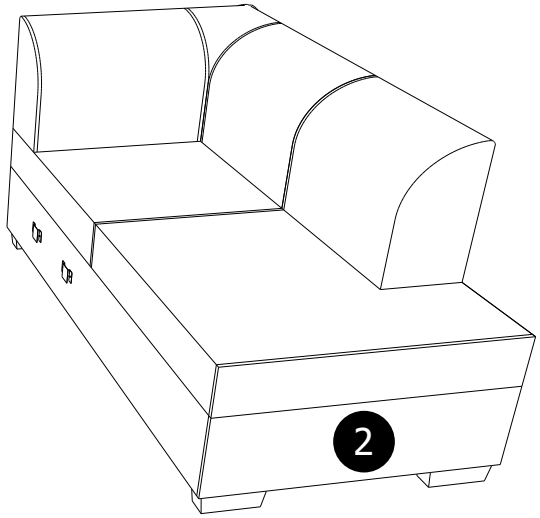
2

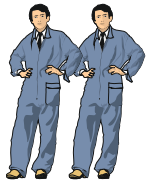

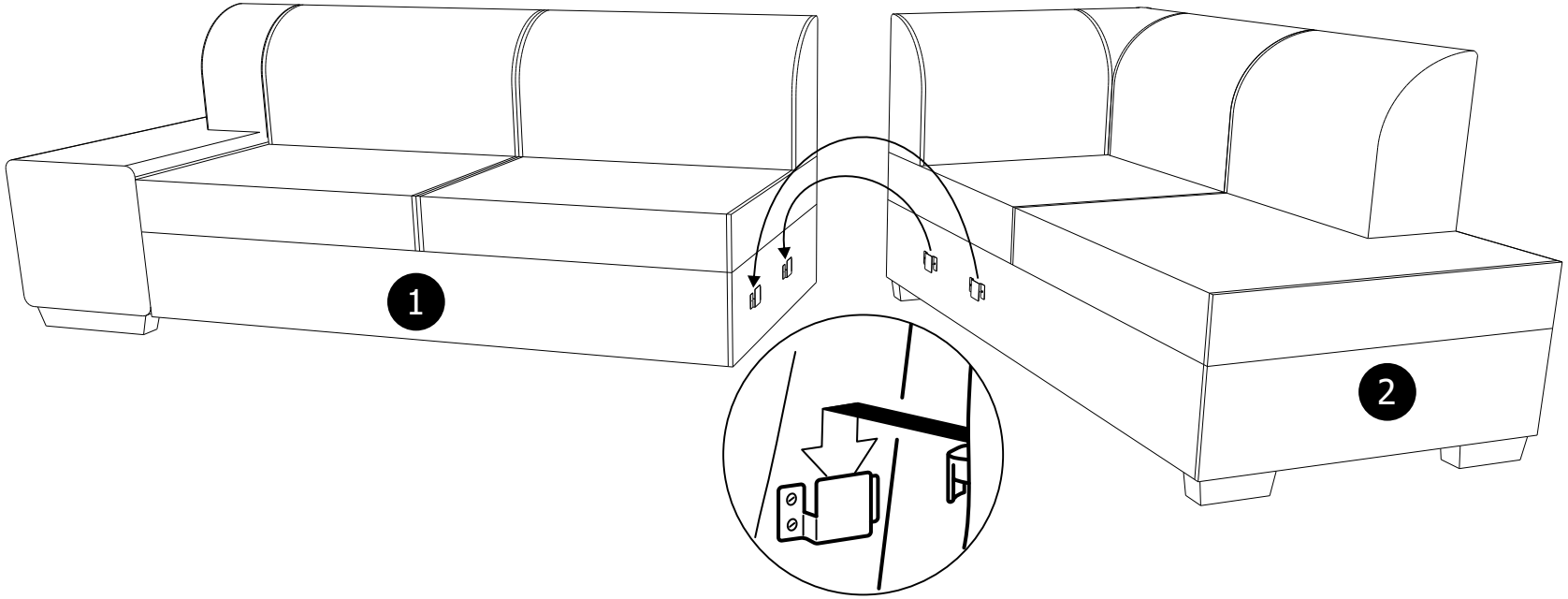
1
2