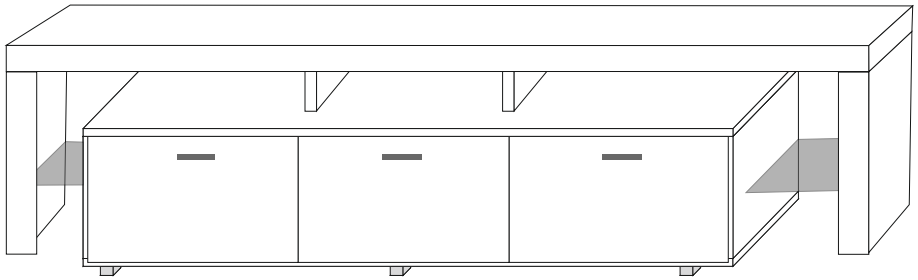

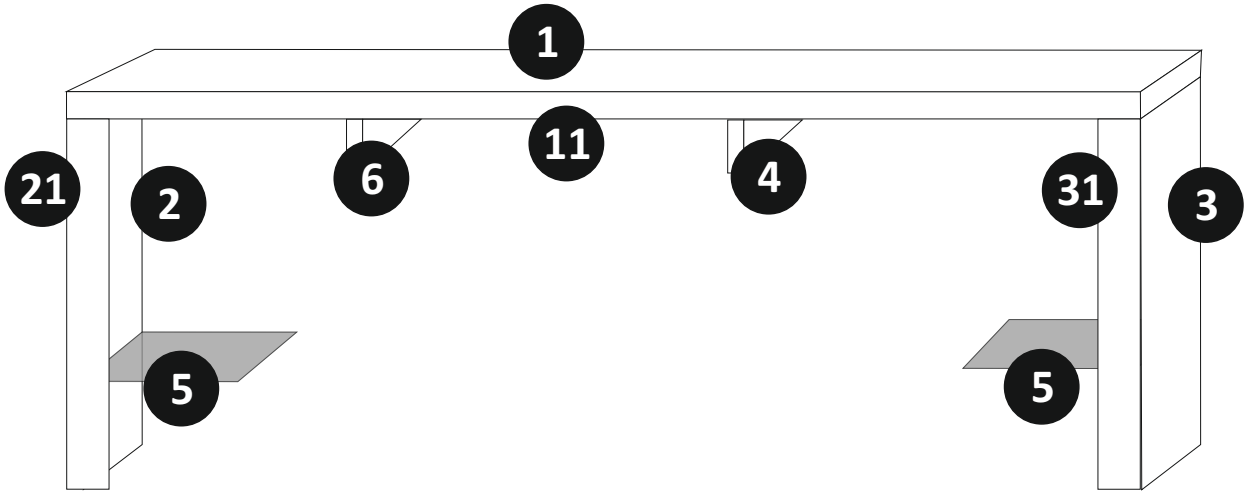
1
11
21
2
6
4
31
3
5
5

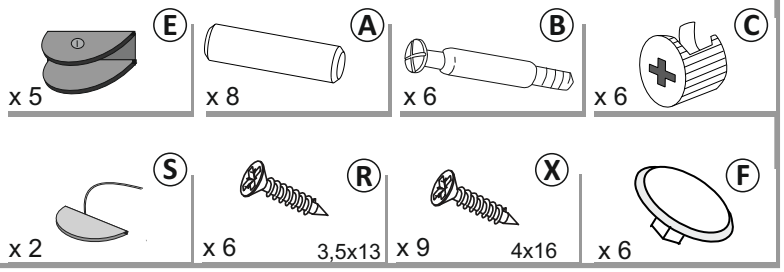
E
x 5
A
x 8
B
x 6
C
x 6
S
x 2
R
x 6
3,5x13
X
x 9
4x16
F
x 6

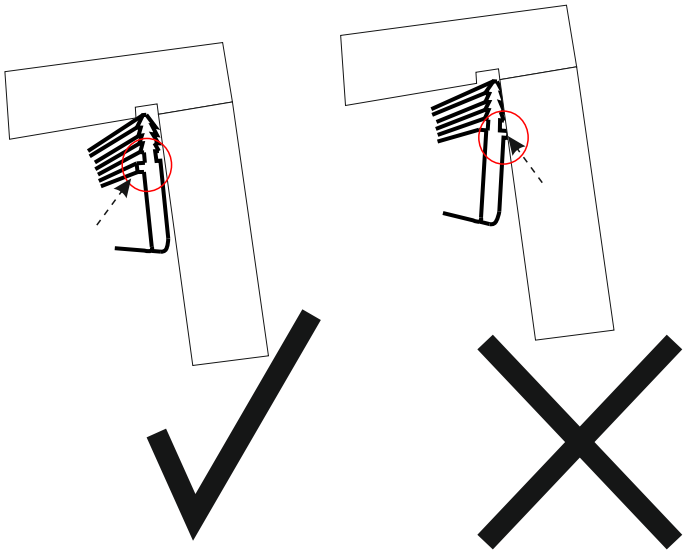

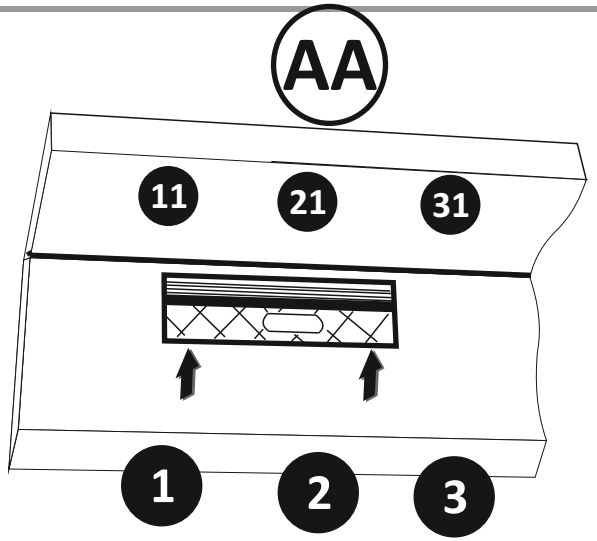
AA
11
21
31
1
2
3

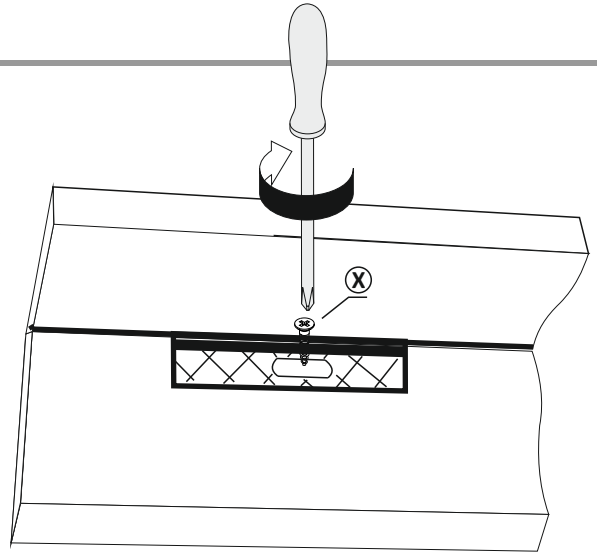
X

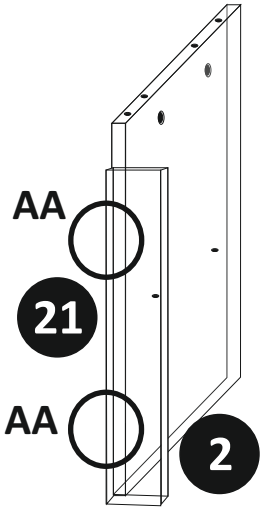
AA
21
AA
2

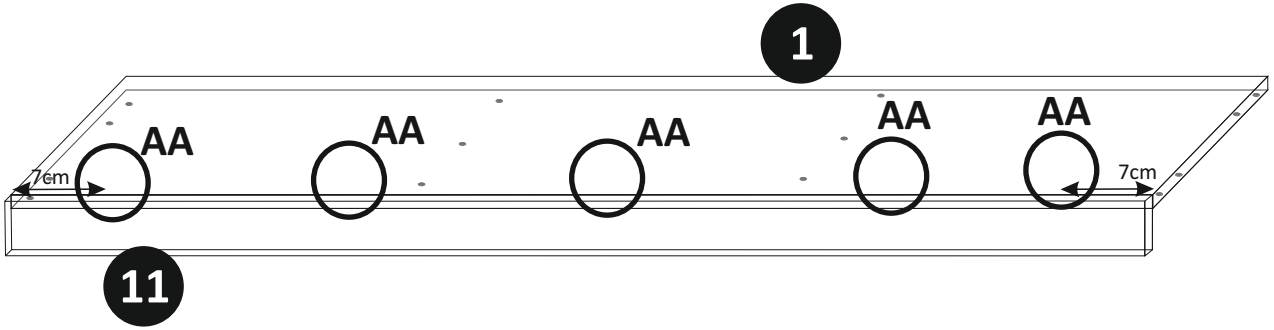
1
AA
AA
AA
AA
AA
7cm
7cm
11

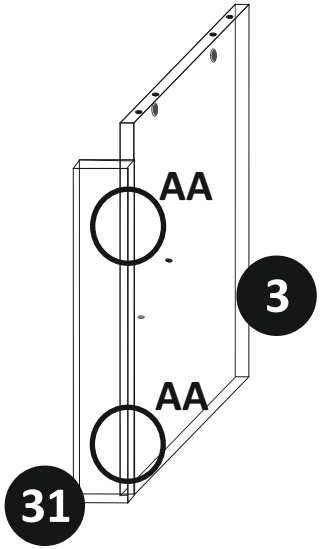
AA
3
AA
31

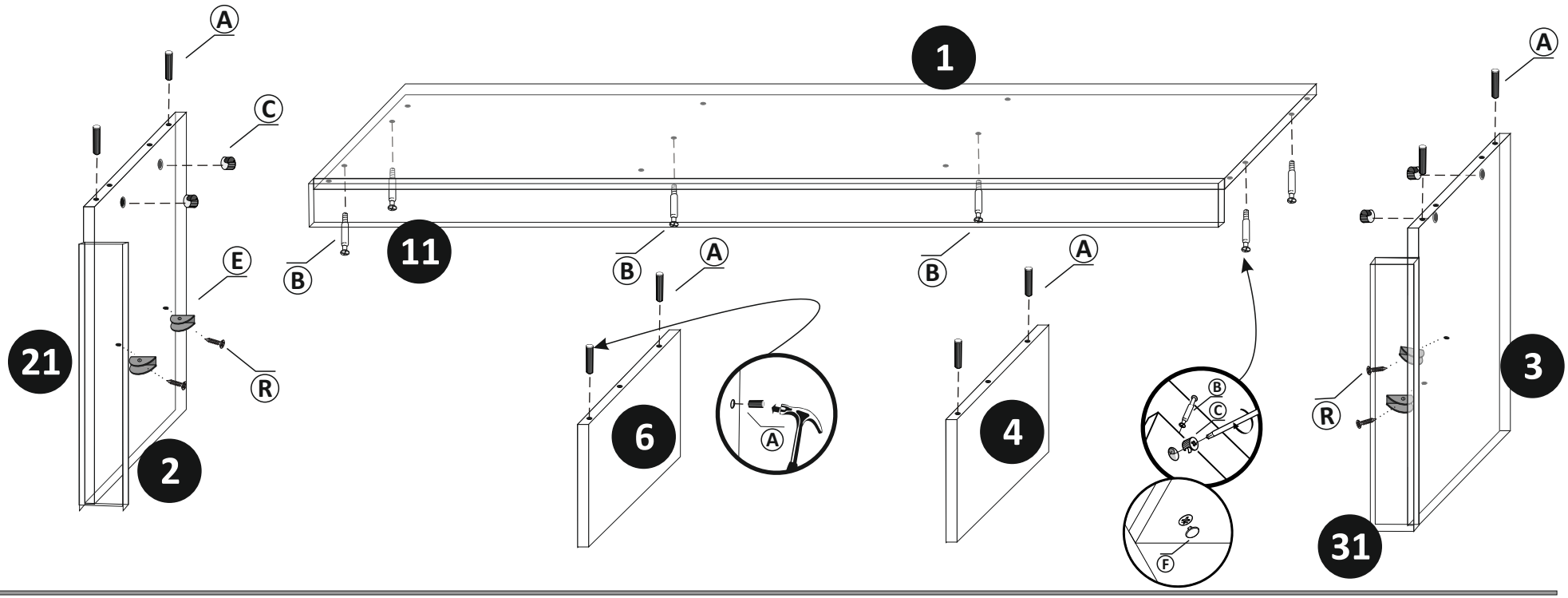
A
C
E
R
21
2
1
11
B
B
A
6
A
A
4
B
C
F
A
R
3
31

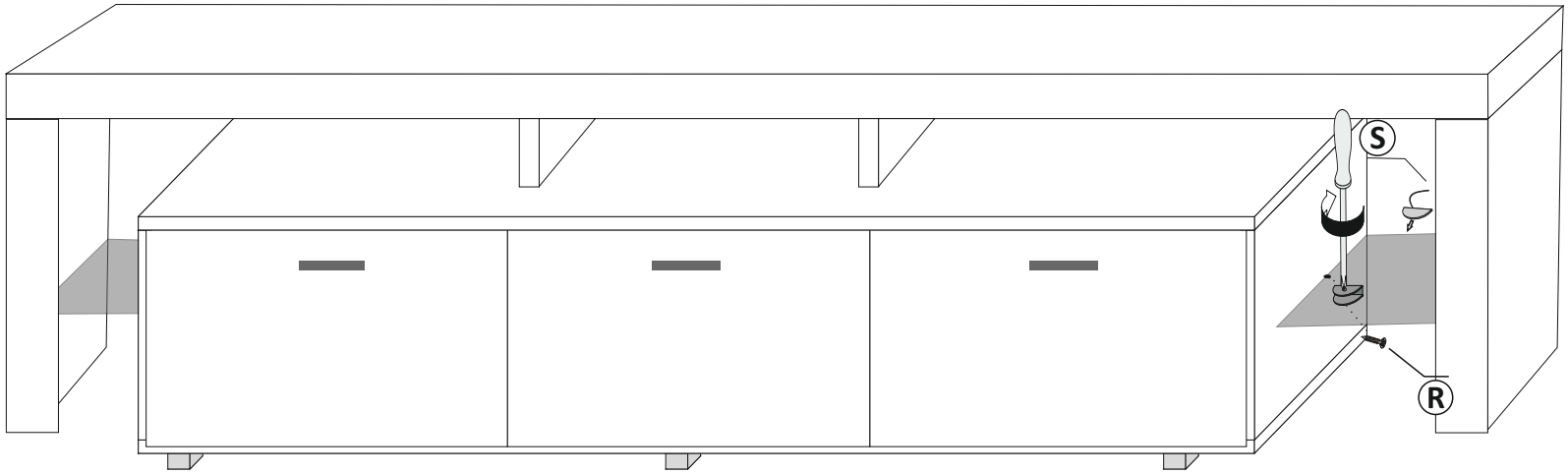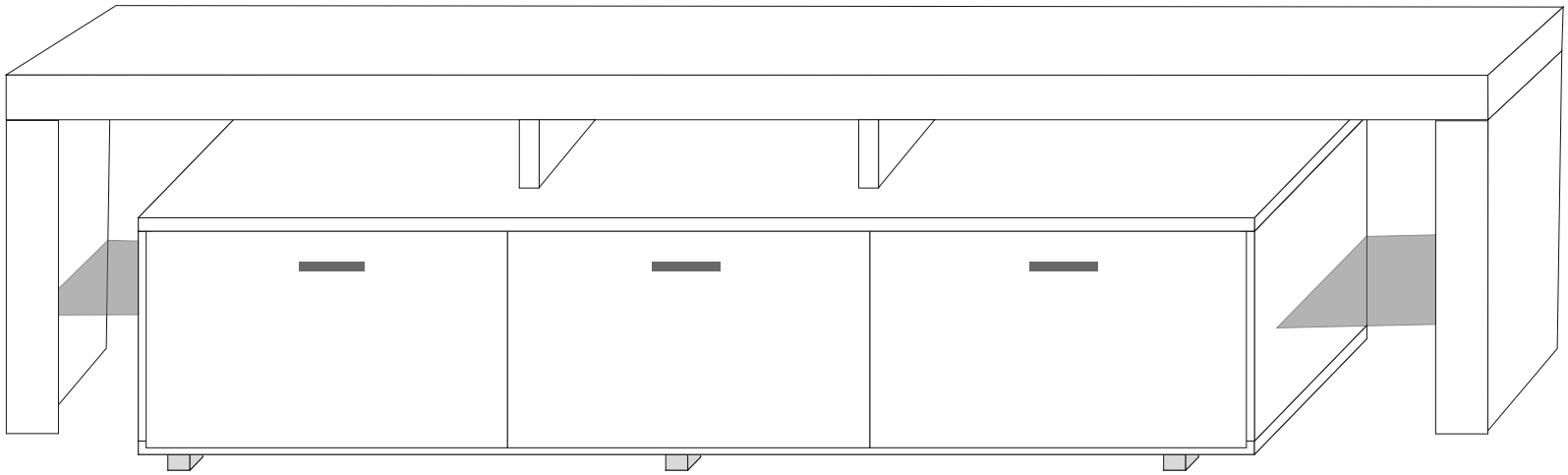
S
R